ITEM / ARTICLE / ARTICULO # 271574

STAINLESS STEEL NG GAS GRILL
GRIL AU GAZ NATUREL EN ACIER INOXYDABLE (page 28)
PARRILLA A GAS GN DE ACERO (página 55)

MODEL / MODÈLE / MODELO # 730-0522

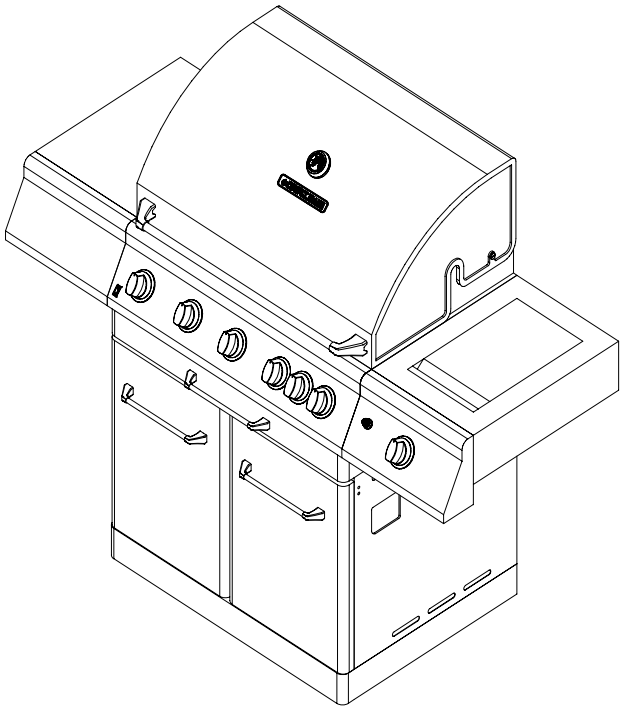

WARNING
To reduce the risk of fire, burn hazard or other injury, read the Care and Use Manual carefully and completely before using your grill.

WARNING
FOR OUTDOOR USE ONLY

WARNING
This grill is not intended to be installed in or on recreational vehicles and/or boats.

Example only: SERIAL # _____ MFG. DATE _____ PURCHASE DATE: _____

H20Y07N-5

Questions, problems, missing parts? Before returning to your retailer, call our customer service department at 1-877-323-5263, 8 a.m. - 6 p.m., PST, Monday - Friday, 8 a.m. – 12 p.m. Saturday.

TABLE OF CONTENTS

Safety Information……3

Package Contents List……7

Preparation……8

Assembly Instructions……8

Installation Instructions……14

Operation Instructions……15

Care and Maintenance……20

Trouble shooting……22

Warranty……24

Replacement Parts List……25

WARNING

If you smell gas:
1. Shut off gas to the appliance.
2. Extinguish any open flame.
3. Open lid.
4. If the odor continues, keep away from the appliance and immediately call your gas supplier or local fire department.

WARNING

1. Do not store or use gasoline or other flammable vapors and liquids in the vicinity of this or any other appliance.

SAFETY INFORMATION

Please read and understand this entire manual before attempting to assemble, operate or install the product. If you have any questions regarding the product please call customer service at 1-877-323-5263, 8 a.m. - 6 p.m., PST, Monday - Friday, 8 a.m. – 12 p.m. on Saturday.

1. Safety Symbols

   WARNING – Hazardous or unsafe practices which could result in severe personal injury or death.

   CAUTION – Hazardous or unsafe practices which could result in minor personal injury.
2. Do not try lighting this appliance without first reading the "LIGHTING INSTRUCTIONS" section on page 16 of this manual.
3. Check all gas supply fittings for leaks before each use. Do not use the grill until all connections have been checked and do not leak. Do not smoke while leak testing. Never leak test with an open flame.
4. Do not store or use gasoline or other flammable vapors and liquids in the vicinity of this or any other appliance.
5. When lighting, keep your face and hands as far away from the grill as possible.
6. Storage of an outdoor cooking gas appliance indoors is permissible only if the Natural gas supply is disconnected from the outdoor cooking gas appliance.
7. Failure to properly place the burner over the orifice could cause a fire to occur behind and beneath the valve panel, thereby damaging the grill and making it unsafe to operate.
8. Do not leave the grill unattended while cooking.
9. This grill is not intended to be installed in or on recreational vehicles and / or boats.
10. Do not install this unit into combustible enclosures. There should be a minimum clearance of 24 inches from all sides to combustible materials.
11. Outdoor cooking appliance shall not be used under overhead combustible construction.
12. Keep the rotisserie motor electric cord away from the heated surfaces of the grill. When not in use, remove and store the motor in a dry location.
13. Keep any electrical supply cords and fuel supply hoses away from any heated surfaces.
14. Spiders and insects can nest inside the burners of the grill and disrupt gas flow. Inspect the grill at least twice a year.
15. The grill and its individual shut-off valve must be disconnected from the gas supply piping system during any pressure testing of that system at test pressures in excess of 1/2 inch psi. (3.5 kpa).
16. The grill must be isolated from the gas supply piping system by closing its individual manual shut-off valve during any pressure testing of the gas supply piping system at test pressure equal to or less than 1/2 inch psi (3.5 kpa).

WARNING

Spiders and insects can nest inside the burners of the grill and disrupt gas flow. This very dangerous condition could cause a fire behind the valve panel, thereby damaging the grill and making it unsafe for operation. Inspect the grill at least twice a year.

WARNING

Do not use the grill if the odor of gas is present. Contact customer service at 1-877-323-5263.

CAUTION

1. The grill head is heavy and will require two or more people to lift and position onto grill cart.
2. Before cleaning, make sure the gas supply and control knobs are in the “OFF” position and the burners have cooled.
3. When using a match to light the grill make sure to use the attached lighting rod.
4. When using the rotisserie burner, remove the warming rack. High heat from the rotisserie burner may cause the warming rack to bend.
5. Do not alter the grill in any manner.
6. Clean and inspect hoses before each use. If there is evidence of abrasion, wear, cuts or leaks, the hose must be replaced prior to operation. The replacement hose should be in accordance with the manufacturer’s specifications.

BEFORE LIGHTING

Inspect the gas supply hoses prior to turning on the gas. If there is evidence of cuts, wear, or abrasion, it must be replaced prior to use.

Use the pressure regulator and hose assembly supplied with the grill. Never substitute regulators for those supplied with the grill. Contact customer service for proper replacement parts.

Leak test the piping and regulator connections with a 1 part soap and 1 part water solution before operating the grill (See “Leak Testing” instructions on page 14).

Do not turn “ON” the gas supply at the Natural gas shut off valve unless the Quick-Connect gas hose is properly connected to the side burner gas pipe system and all burner valves are in the “OFF” position.

WARNING

Do not try lighting this appliance without first reading the “LIGHTING INSTRUCTIONS” section of this manual.

INFRARED SEARING SIDE BURNER

Inspect the gas supply hose prior to turning on the gas. If there is evidence of cuts, wear or abrasion, it must be replaced prior to use. Do not use the side burner if gas odor is present. Keep a spray bottle of soapy water near the grill and check the gas connections before each use.

ROTISSERIE DRIVE MOTOR

To ensure continued protection against electric shock:
Connect to properly grounded outlets only.
Keep extension cord connections dry and off the ground.
Do not expose to rain.
Do not use indoors.

WARNING

Electrical Grounding Instructions for Rotisserie Motor – This appliance (rotisserie motor) is equipped with a plug and should be plugged directly into a properly grounded receptacle. When installed, must be electrically grounded in accordance with local codes or in the absence of local codes, with the National Electrical Code, ANSI/NFPA 70 or the Canadian Electrical Code, CSA C22.1. DO NOT cut or remove the grounding prong from this plug.

1. To protect against electrical shock, do not immerse cord or plugs in water or other liquids.
2. Unplug from the outlet when not in use and before cleaning. Allow to cool before putting on or taking off parts.
3. Do not operate any outdoor cooking gas appliance with a damaged cord, plug, or after the appliance malfunctions or has been damaged in any manner. Contact the manufacturer for repair.
4. Do not let the cord hang over the edge of a table of touch hot surface.
5. Do not use an outdoor cooking gas appliance for purposed other than intended.
6. When connecting, first connect plug to the outdoor cooking gas appliance then plug appliance into the outlet.
7. Use only a Ground Fault Interrupt (GFI) protected circuit with this outdoor cooking gas appliance.
8. Never remove the grounding plug or use with an adapter of 2 prongs.
9. Use only extension cords with 3 prong grounding plug, rated for the power of the equipments, and approved for outdoor use with a W-A marking.

TESTED IN ACCORDANCE WITH ANSI Z21.58 LATEST STANDARD and CSA 1.6-2007 STANDARD FOR OUTDOOR COOKING GAS APPLIANCES. THIS GRILL IS FOR OUTDOOR USE ONLY.

Check your local building codes for the proper method of installation. In the absence of local codes, with either the National Fuel Gas Code, ANSI Z223.1/NFPA 54, or CSA B149.1, Natural Gas and propane Installation Code. Electrical Code, ANSI/NFPA 70.

CALIFORNIA PROPOSITION 65-WARNING

The burning of gas fuel generates some by-products, which are known by the State of California to cause cancer or reproductive harm. To minimize exposure to these substances, always operate this unit according to the care and use manual, ensuring you provide good ventilation when cooking with gas.

SAFETY PRACTICES TO AVOID INJURY

When properly cared for, your grill will provide safe, reliable service for many years. However, extreme care must be used as the grill produces intense heat that can increase accident potential.
When using this appliance basic safety practices must be followed, including the following:

- Do not repair or replace any part of the grill unless specifically recommended in this manual. All other service should be referred to a qualified technician.
- The grill is for outdoor use only.
- Children should not be left alone or unattended in an area where the grill is being used. Do not allow children to sit, stand or play on or around the grill at any time.
- Do not store items of interest to children around or below the grill or cart. Do not allow children to crawl inside the cart.
- Never let clothing, pot holders or other flammable materials come in contact with or come too close to any grate, burner or hot surface until it has cooled. The fabric could ignite, causing serious personal injury.
- For personal safety, wear proper apparel. Loose fitting garments or sleeves should never be worn while using this appliance. Some synthetic fabrics are highly flammable and should not be worn while cooking.

- Only certain types of glass, ceramic, earthenware, or other glazed utensils are suitable for grill use. Other types of materials may shatter with sudden temperature changes. Use only low or medium heat settings in accordance with the manufacturer's guidelines.
- Do not heat unopened food containers as a build-up of pressure may cause the containers to burst.
- Use a covered hand when opening the grill lid. Never lean over an open grill.
- When lighting a burner, always pay close attention to what you are doing. Make certain you are aware of which burner you are lighting so that your body and clothing remain clear of open flames.
- When using the grill, do not touch the grill rack, burner grate or immediate surroundings as these areas become extremely hot and could cause burns. Use only dry potholders. Moist or damp potholders on hot surfaces may cause steam burns. Do not use a towel or bulky cloth in place of potholders. Do not allow potholders to touch hot portions of the grill rack.
- Grease is flammable. Let hot grease cool before attempting to handle it. Do not allow grease deposits to collect in the grease box, clean often.
- Do not use aluminum foil to line the grill racks or grill bottom. This can severely upset combustion air flow or trap excessive heat in the firebox area.
- For proper lighting and performance of the burners, keep the burner ports clean. It is necessary to clean them periodically for optimum performance. The burners will only operate in one position and must be mounted correctly for safe operation. (See "Care and Maintenance" instructions on page 20).
- Clean the grill with caution. To avoid steam burns, do not use a wet sponge or cloth to clean the grill while it is hot. Some cleaners produce noxious fumes or can ignite if applied to a hot surface.
- Turn all control knobs "OFF" and make certain the grill is cool before using any type of aerosol cleaner on or around it. The chemical that produces the spraying action could, in the presence of heat, ignite or cause metal parts to corrode.
- Do not use the grill to cook excessively fatty meats or other products that promote flare-ups.
- Do not operate the grill under unprotected combustible constructions. Use only in well ventilated areas. Do not use in buildings, garages, sheds, breezeways or other such enclosed areas.
- Keep the areas surrounding the grill free from combustible materials including, fluids, trash, and vapors such as gasoline or charcoal lighter fluid. Do not obstruct the flow of combustion and ventilation air. If the unit is stored indoors, make sure it is cool.
- Do not use briquettes of any kind in the grill. The 730-0522 Natural Gas grill is designed for optimum performance without the use of briquettes. Do not place briquettes on the flame tamers, as this will block the vent to the grill burners. Adding briquettes can damage ignition components thus voiding the warranty.
- Keep the back of the cart free and clear from debris.
- Keep electrical supply cords and the rotisserie motor cord away from heated areas of the grill.
- Never use the grill in extremely windy conditions. If located in a consistently windy area (oceanfront, mountaintop, etc.), a windbreak will be required. Always adhere to the clearance specifications.

PLACEMENT OF THE GRILL

⚠ WARNING
Do not install this unit into combustible enclosures. There should be a minimum clearance of 24 inches from all sides to combustible materials.

Outdoor cooking appliances should not be used under overhead combustible construction.

When determining a suitable location take into account concerns such as exposure to wind, proximity to traffic paths, and keeping gas supply lines as short as possible.

Place the grill in well-ventilated areas. Never place the grill in a building, garage, breezeway, shed or other such enclosed areas. During heavy use, the grill will produce a lot of smoke.

PACKAGE CONTENTS LIST

1. Body Assembly ----------1pc. 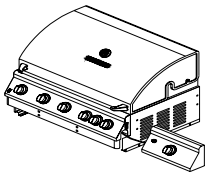	2. Bottom Panel----------1 pc. 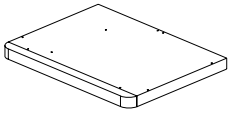	3. Door----------2pcs. 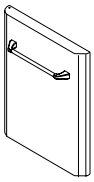
4. Side Burner Shelf----------1pc. 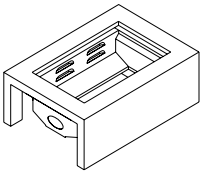	5. Left Side Shelf----------1pc. 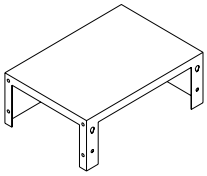	6. Left Side Panel----------1pc. 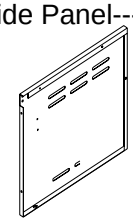
7. Right Side Panel----------1pc. 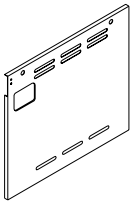	8. Back Panel----------1pc. 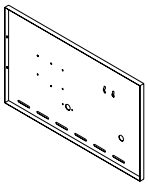	9. Cart Frame----------1pc. 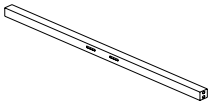
10. Swivel Caster----------1pc. 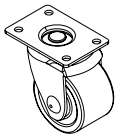	11. Swivel Caster with Brake----1pc 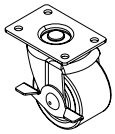	12.. Stationary Caster-------2pcs. 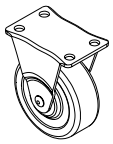
13. Transformer Assembly----1pc 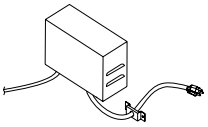	14 Motor Bracket----------1pc 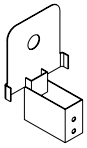	

HARDWARE CONTENTS

Pack	Description	Quantity
A	5/32-in. x 10-mm Truss Head Screw	26 pcs.
B	5/32-in. Locking Washer	26 pcs.
C	1/4-in. x 15-mm Truss Head Screw	47 pcs.
D	1/4-in. Locking Washer	47 pcs.
E	5/32-in. x 15-mm Ladder Bolt	1 pc.
F	Lighting Rod	1 pc.
G	Battery / AAA	1 pc.
H	Door Hinge Bracket, Left	1 pc.
I	Door Hinge Bracket, Right	1 pc.
J	1/4-in. Washer	3 pcs.

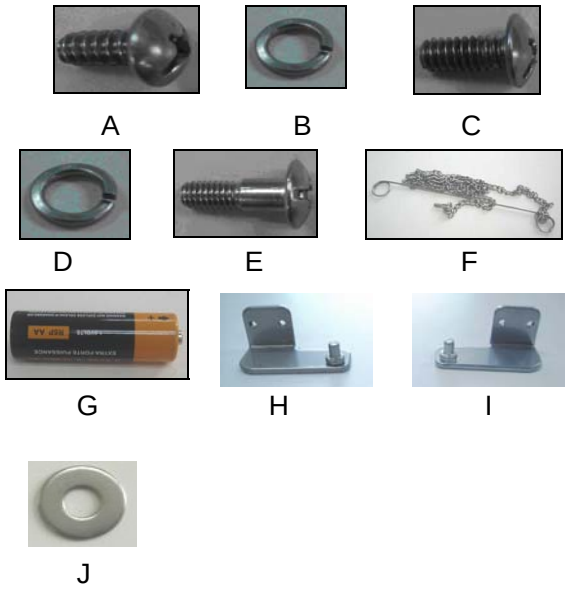

PREPARATION

Before beginning assembly, installation or operation of product, make sure all parts are present. Compare parts with package contents list and diagram above. If any part is missing or damaged, do not attempt to assemble, install or operate the product. Contact customer service for replacement parts.

- Estimated Assembly Time: 50 minutes
- Tools Required for Assembly: Phillips Screwdriver (not included) and Wrench (not included)
- Note: The right and left sides of the grill are designated as if you are standing and facing the grill.

ASSEMBLY INSTRUCTIONS

1. **Caster Assembly**
   Mount the casters onto the bottom panel (A) using sixteen 1/4-in. x 15-mm truss head screws from pack C and sixteen 1/4-in. locking washers from pack D.

   The swivel caster **with brake** should be positioned under the left rear of the cart bottom (C) and the swivel caster should be positioned under left front as shown in fig. 1. The two stationary casters (B) should be positioned under the right side.

Fig. 1

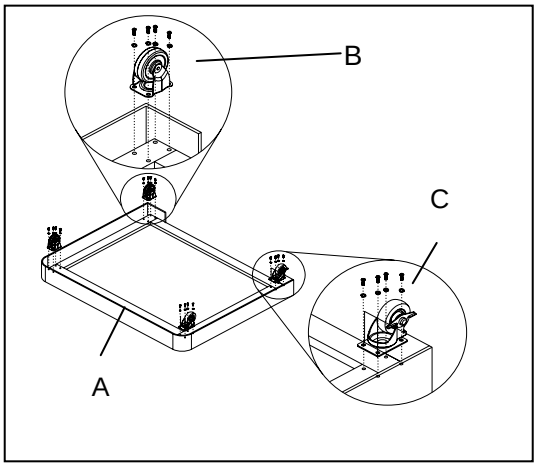

2. **Side Panel Assembly**
Use three 1/4-in. x 15-mm truss head screws from Pack C and three locking washers from Pack D to connect the bottom of the left side panel (B) to the bottom panel (A). Make the left side panel flush with the rear of bottom panel and tighten the screws.

Repeat steps for the right side panel (C).

Fig. 2

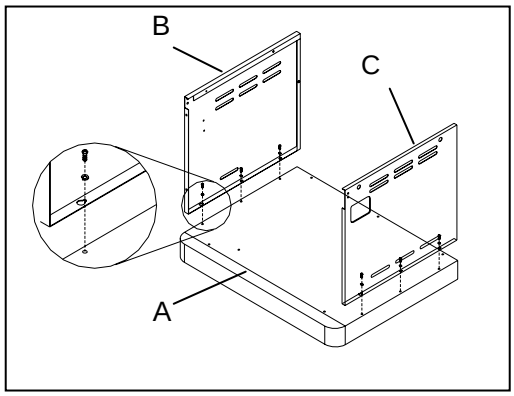

3. **Back and Side Panel Assembly**
Remove the back panel from the carton. Position the back panel (A) with the flat side facing outward. Attach the back panel to the bottom panel (B) with three 1/4-in. x 15-mm truss head screws from pack C and three 1/4-in. locking washers from pack D as shown in fig. 3.

Fig. 3

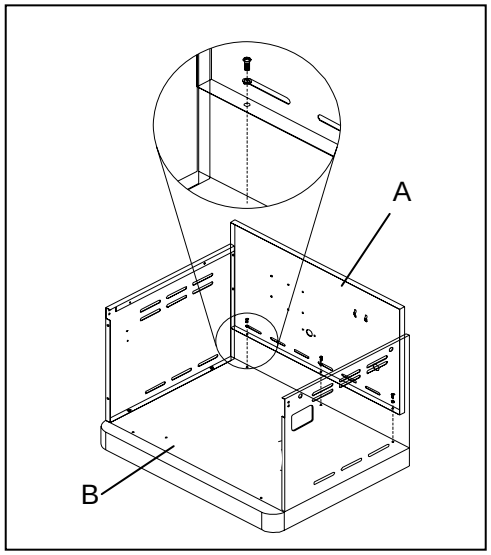

Use four 1/4-in. x 15-mm truss head screws from pack C and four 1/4-in. locking washers from pack D to connect the back panel to the right and left side panels (C) as shown in fig. 4.

Fig. 4

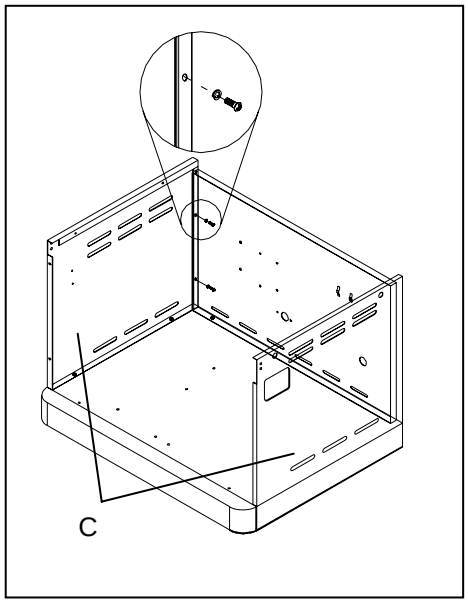

4. **Transformer Box Assembly**
Align the holes of the transformer box (A) with the holes on the back panel (B). Attach the transformer (A) to the back panel (B) using six 5/32-in. x 10-mm truss head screws from pack A and six 5/32-in. locking washers from pack B as shown in fig. 5.

The power cord bracket (C) connects to the rear cart panel using two 5/32-in. x 10-mm truss head screws from pack A and two 5/32-in. locking washers from pack B as shown in fig. 5.

Fig. 5

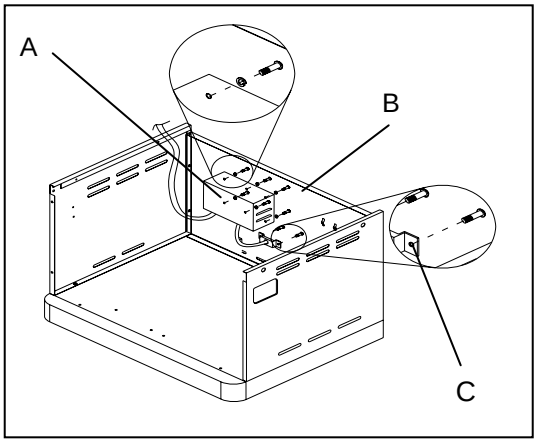

5. **Cart Frame Assembly**
Remove the cart frame from the carton (A). Attach the cart frame (A) to the side panels (B) using four 1/4-in. x 15-mm truss head screws from pack C and four 1/4-in. locking washers from pack D as shown in fig. 6.
Hint: Hinge bracket slot will need to be facing upwards.

Fig. 6

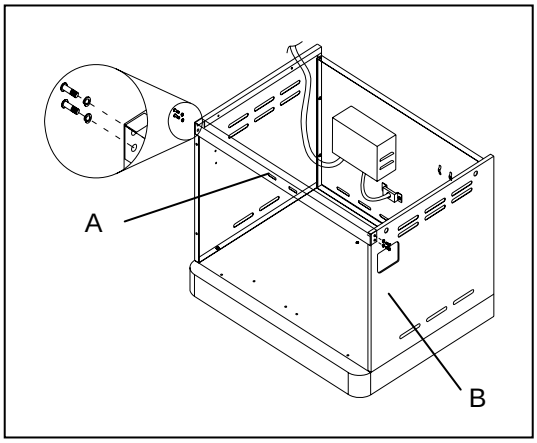

6. **Door Assembly**
Insert hinge pin, which is underneath the bottom of door(A) into the hole located on bottom panel. Insert door hinge brackets into the cart frame (B) and align with the hole in the top of the door. Attach the door hinge brackets to the cart frame with four 5/32-in. x 10-mm truss head screws from pack A and four 5/32-in. locking washers from pack B as shown in fig. 7.

Fig. 7

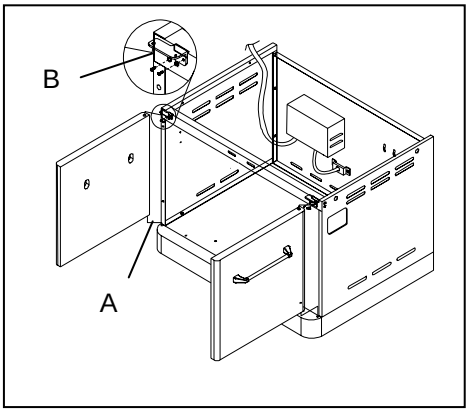

7. **Natural Gas Regulator Clamp Assembly**
Attach the natural gas regulator clamp to side panel (A) with four 5/32-in. x 10-mm truss head screws from pack A and four 5/32-in. locking washers from pack B as shown in fig. 8.

Fig. 8

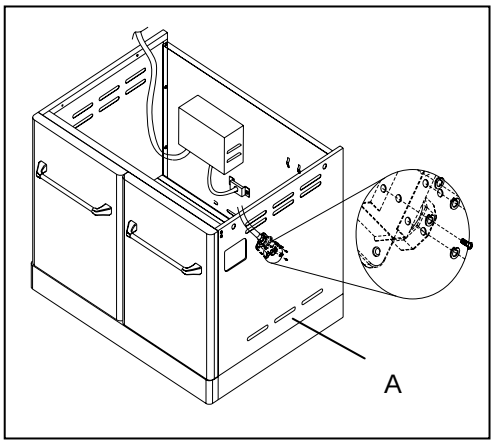

8. **Firebox Assembly**
Remove the firebox assembly (A) from the carton and carefully place onto the grill cart (B). **NOTE**: Take care when moving the firebox assembly as the bottom flanges can be bent causing the holes not to align.

Connect the small wire (C) that extends from the transformer box to the wiring junction box (D) located above the left panel near the rear of the cabinet as shown in fig. 9 exploded view.

> ⚠ **CAUTION** The firebox assembly is heavy and will require two or more people to lift and position onto grill cart. Failure to do so may result in back injury.

Fig. 9

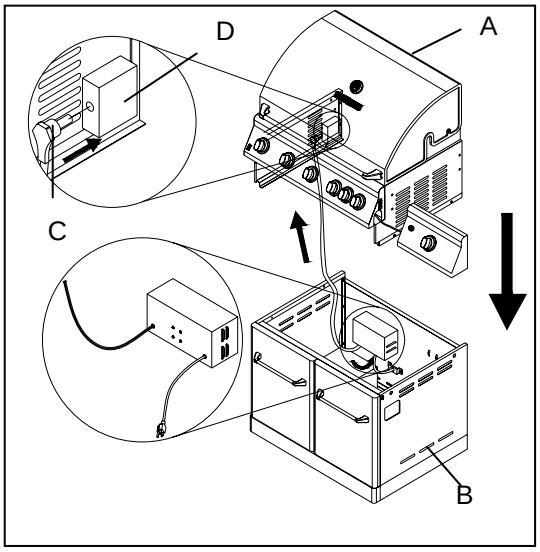

Fig. 10

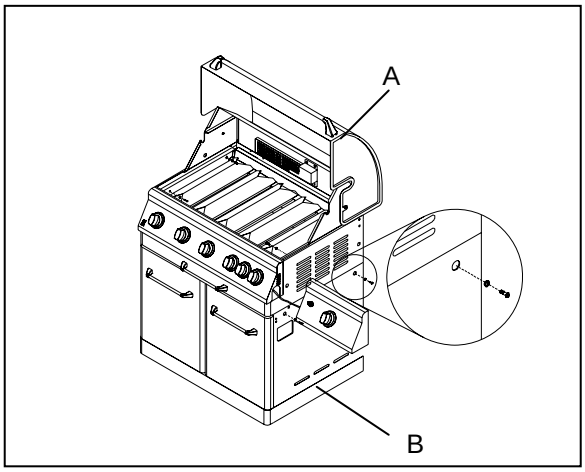

Attach the firebox assembly (A) to the grill cart (B) using four 1/4-in. x 15-mm truss head screws from pack C and four 1/4-in. locking washers from pack D (**Note:** Two screws and two washers for each side of cart) as shown in fig. 10.

Fig. 11

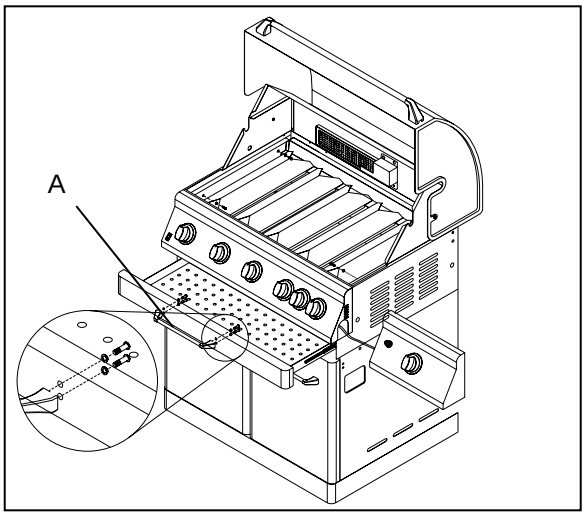

9. **The Utility Drawer Handle Assembly**
Attach the utility drawer handle (A) to the utility drawer using four 5/32-in. x 10-mm truss head screws from pack A and four 5/32-in. locking washers from pack B. as shown in fig. 11.

10. **Searing Side Burner Control Panel Assembly**
Attach the side burner bowl assembly (A) to the control panel (B) using four 1/4-in. x 15-mm truss head screws from pack C and four 1/4-in locking washers from D as shown in fig. 12.

Fig. 12

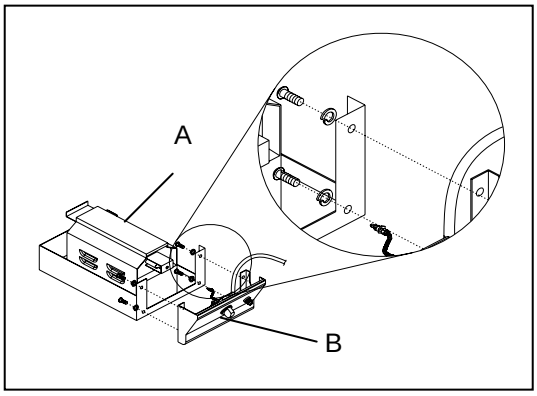

11. **Searing Side Burner Gas Line Installation**
Insert the flexible gas line (A) with attached orifice into the searing side burner opening (B) as shown in fig. 13. Tighten with a wrench.

Fig. 13

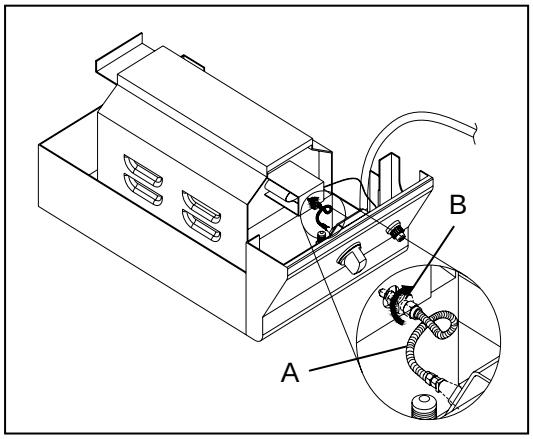

12. **Searing Side Burner and Side Shelf Assembly**
2 screws used to attach the left side shelf(A) are already screwed into the cart left panel.
Loosen the 2 screws that are pre-placed onto cart left panel (**Hint** : Do not remove these 2 screws completely). Align the bottom key holes on side shelf with two loosened screws, and tighten these 2 screws. Use two 1/4-in. x 15mm truss head screws from pack C and two 1/4-in. Locking Washer from pack D, to keep the left side shelf in place, (to screw holes are located in the top of right side of left side shelf), Attach left side control panel to the main control panel use one 5/32-in. x 10mm truss head screws from pack A, one 5/32-in locking washer from pack B, and one 1/4-in washer from pack J as shown in fig. 14

Repeat steps for the searing side burner(B).

Fig. 14

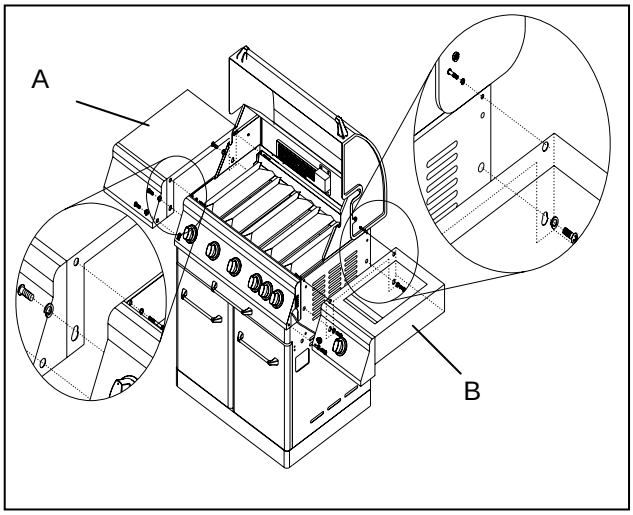

Note: the **top 2** screws of the firebox should be screwed from inside to outside for left side shelf and searing side burner, but **bottom 3** screws should be tightened from outside to inside.

.

13. **Igniter Installation**
Plug the Rotisserie Burner and Searing Side Burner igniter wires (A) into the slots in the back of the igniter module as shown in fig.16.
(**Note:** Rotisserie Burner igniter wire is located under the main fire box assembly, Searing Side Burner igniter wire is located under the Searing Side Burner bowl assembly.)

Fig. 15

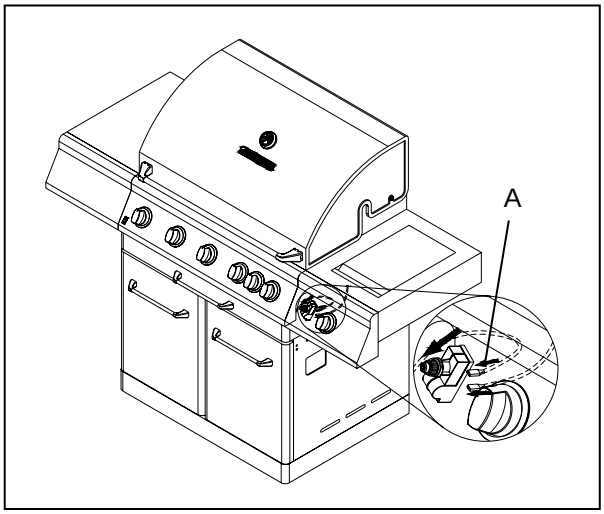

14. **Rotisserie Bracket Assembly**
Align the holes on the rotisserie bracket (A) with the holes located on the left side of the firebox. Insert the screws provided and tighten as shown in fig. 16.

Fig. 16

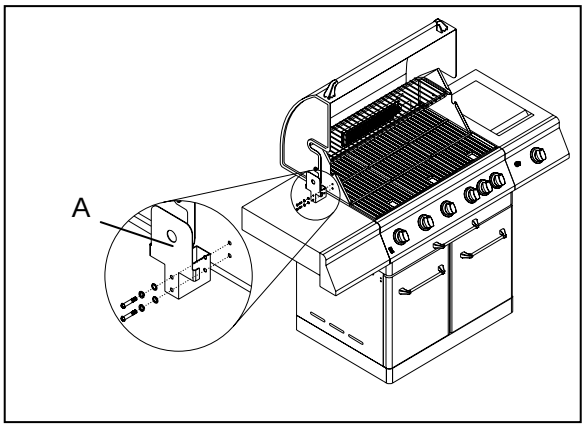

14. **Battery Installation**
Remove the ignition button housing (A); insert the battery from pack G into the housing with the positive terminal (+) facing outward (B). Replace the ignition button housing after the battery has been installed as shown in fig. 17.

Fig. 17

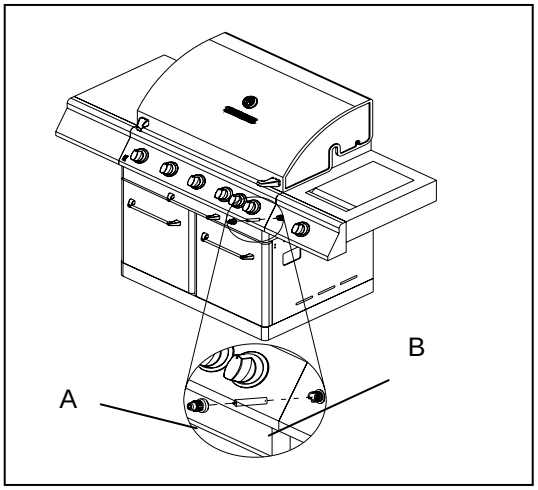

15. **Lighting Rod Installation**
Remove the lighting rod and one 5/32-in. x 15-mm ladder bolt from pack E and F. Open the right door (A) and insert the ladder bolt with the lighting rod into the hole in the door. Tighten the ladder bolt until it locks the lighting rod into place as shown in fig. 18.

Fig. 18

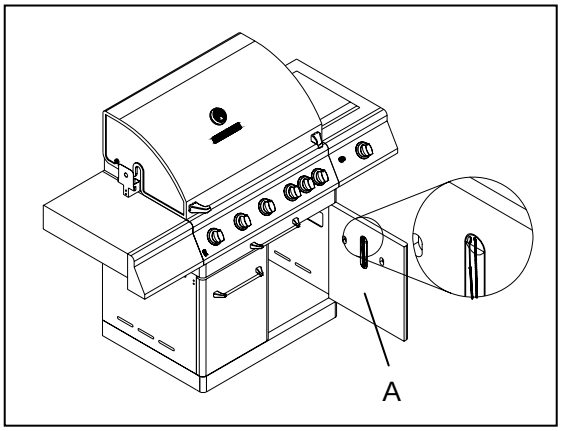

16. **Installation of Natural Gas Regulator**
Connect the 12-ft. PVC natural gas hose to the regulator (A). Connect the opposite end of the natural gas hose to the natural gas supply line using the quick-disconnect fitting (B) as shown in fig. 19.

Check all gas supply fittings for leaks before each use. Do not use the grill until all connections have been checked and do not leak (see “Leak Testing” instructions below).

Fig. 19

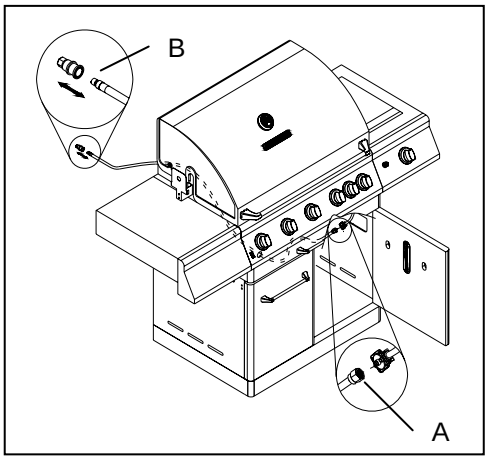

INSTALLATION INSTRUCTIONS

GAS HOOK-UP

Only the pressure regulator and hose assembly supplied with the grill should be used. Any replacement pressure regulator and hose assembly must be specified by the grill manufacturer.
This grill is configured for Natural Gas. Do not use a liquid propane cylinder.

Total gas consumption (per hour) of the 730-0522 natural gas grill with all burners set on “HI”:

Main burners	50,000 BTU/Hr.
Rear burner	10,000 BTU/Hr.
Side burner	15,000 BTU/Hr.
Total	75,000 BTU/Hr.

The installation of this appliance must conform with local codes or, in the absence of local codes, with either the National Fuel Gas Code, ANSI Z223.1/NFPA 54, National Gas Propane Installation Code, CSA B149.2.
Installation in Canada must be in accordance with the Standard CAN/CGA-B149.2 (installation code for gas burning appliances and equipment) and local codes.

LEAK TESTING

GENERAL

Although gas connections on the grill are leak tested prior to shipment, a complete gas tightness check must be performed at the installation site. Before each use check the whole system for leaks following the procedures listed below.

If the smell of gas is detected at any time, you should immediately check the entire system for leaks.

BEFORE TESTING
Make sure all packing materials have been removed from the grill, including the burner tie-down straps.

WARNING
Check all gas supply fittings for leaks before each use. Do not use the grill until all connections have been checked and do not leak. Do not smoke while leak testing. Never leak test with an open flame.

Make a solution of one part liquid detergent and one part water. You will need a spray bottle, brush, or rag to apply the solution to the fittings.

TO TEST
1. Make sure the control valves are in the “OFF” position, and turn on the gas supply.
2. Apply the soap solution to all pipe fittings, from the Natural gas regulator and supply valve up to and including the connections to the burners. Soap bubbles will appear where a leak is present.
3. If a leak is present, immediately turn the gas supply “OFF” and tighten leaky fittings.
4. Turn the gas back on and recheck.
5. Should the gas continue to leak from any of the fittings, turn “OFF” the gas supply and contact customer service at 1-877-323-5263.
6. If it is evident there is excessive abrasion or wear, or the hose is cut, it must be replaced prior to the outdoor cooking gas appliance being put into operation.

Only those parts recommended by the manufacturer should be used on the grill. Substitutions will void the warranty.

INSTALLER FINAL CHECK

- Maintain specified clearance of 24 inches from combustible materials and construction.
- All internal packaging has been removed.
- The hose and regulator are properly connected.
- The unit has been tested and is free of leaks.
- The gas supply shut off valve has been located.
- All burners are installed.
- Keep the instruction manual for future reference.

WARNING
1. The grill and its individual shutoff valve must be disconnected from the gas supply piping system during any pressure testing of that system at test pressure in excess of 1/2-in. psi.(3.5kpa).
2. The grill must be isolated from the gas supply piping system by closing its individual; manual shutoff valve during any pressure testing of the gas supply piping supply at test pressure equal to or less 1/2-in. psi.(3.5kpa).

OPERATING INSTRUCTIONS

General Use of the Grill and Rotisserie
Each main burner is rated at 10,000 BTU/Hr. The main grill burners encompass the entire cooking area and are side ported to minimize blockage from falling grease and debris. Above the burners are stainless steel flame tamers. The igniter knobs are located on the center portion of the valve panel. Each rotary igniter is labeled on the control panel.

Using the Grill
Grilling requires high heat for searing and proper browning. Most foods are cooked at a “HI” heat setting for their entire cooking time. However, when grilling large pieces of meat or poultry, it may be necessary to turn the heat to a lower setting after the initial browning. This method cooks the food thoroughly without burning the outside.

Food cooked for a long time or basted with a sugar-based marinade may need a lower heat setting near the end of its cooking time.

To begin:
1. Make sure the grill has been leak tested and is properly placed.
2. Remove any remaining packing materials.
3. Light the grill burners using the Lighting Instructions on page 16.
4. Turn the control knob(s) to the “IGNITE / HI” setting, and preheat the grill for 15 minutes. The grill lid should be closed during the pre-heat period.
5. Place the food on the grill and cook to the desired degree of preparation. If necessary, adjust the heat setting. The control knob may be positioned at any setting between “HI” and “LO”.

Using the Rotisserie Burner
Your grill is capable of performing back burner rotisserie cooking. Light the rear burner as described in the Lighting Instructions on page 16. Once lit, the rotisserie burner will reach cooking temperature in about 1 minute.

Rotisserie kits are sold as accessory items. Please follow the rotisserie kit directions for proper use.

The rotisserie motor must be electrically grounded in accordance with local codes or, in the absence of local codes, with the National Electrical Code, ANSI/NFPA 70.

Using the Infrared Searing Side Burner
The infrared searing side burner produces intense heat to “sear” the outside of the food thus locking the flavorful juices inside. To properly use, cook each side of the meat for 1-5 minutes depending on food type. Once the outside of the meat has been seared, move to the main cooking area to finish cooking the inside to the desired doneness.

To light the searing side burner, refer to the Lighting Instructions on page 16.

Lighting Instructions

Before Lighting
Inspect the gas supply hose prior to turning on the gas. If there is evidence of cuts, wear, or abrasion, it must be replaced prior to use.

Leak check the hose and regulator connections before operating the grill (See the “Leak Testing” instructions on page 14).

Only the pressure regulator and hose assembly supplied with the unit should be used. Never substitute regulators. If a replacement is necessary, contact customer service for proper replacement.

WARNING
Do not use the grill if the odor of gas is present. Contact customer service at 1-877-323-5263.

To Light the Main Burner

1. Make sure all the knobs are in the “OFF” position, and then turn the Liquid Propane cylinder valve “ON” by slowly turning counterclockwise.
2. Open the lid, push and turn the main burner knob slowly to “IGNITE/HI”, burner should light immediately, adjust knob as desired after burner is lit.
3. If the burner does not light, turn the knob to “OFF” and repeat lighting procedure.
4. If the burners still do not light, turn the knob “OFF”, wait 5 minutes for any excess gas to dissipate and repeat lighting procedure or follow the Match Lighting Instructions on page 17.
5. Check for proper burner flame characteristics. Each burner is adjusted prior to shipment; however, variations in the local gas supply may make minor adjustments necessary. Burner flames should be blue and stable with no yellow tips, excessive noise or lifting. Yellow flames indicate insufficient air. Noisy flames or flames that lift away from the burner indicate too much air (See the “Flame Characteristics” section on page 22).

TO LIGHT THE ROTISSERIE BURNER

1. Open the lid, push and turn rear burner knob slowly to “IGNITE/ON” setting; simultaneously press the electronic ignition button to light the burner.
2. Once the burner is lit, release the electronic ignition button and knob.
3. If ignition does not occur in 5 seconds, turn the knob to “OFF”, wait 5 minutes and then repeat the lighting procedure or light by match.

TO LIGHT THE SEARING SIDE BURNER

1. Push and turn sear burner knob slowly to “IGNITE/ON” setting; simultaneously to press the electronic ignition button to light the burner.
2. Once the burner is lit, release the electronic ignition button and knob.
3. If Ignition does not occur in 5 seconds, turn the knob to “OFF”, wait for 5 minutes and then repeat the lighting procedure or light by match.

To Match Light the Grill

If the burner will not light after several attempts using the control knobs, the burners may be lit with a match.

WARNING

When lighting, keep your face and hands as far away from the grill as possible.

CAUTION

When using a match to light the grill make sure to use the attached lighting rod.

CAUTION

Remove the warming rack when using a match to light the rotisserie burner.

Main Burner

1. If you have already attempted to light the main burner with the igniter, allow 5 minutes for any accumulated gas to dissipate.
2. Insert a match into the lighting rod (A) as shown in fig. 20. Ignite the match and insert through the cooking grids (B) to the burner.
3. Press the control knob and rotate to the “IGNITE/HI” setting, continue to press the knob until the burner ignites. The burner should light immediately.
4. If the burner does not light within seconds turn the knob to the “OFF” position, wait 5 minutes and try again.

Fig. 20

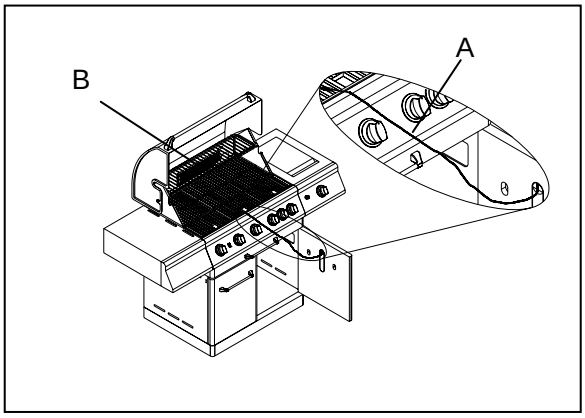

Searing Side Burner

1. If you have already attempted to light the searing side burner with the igniter, allow 5 minutes for any accumulated gas to dissipate.
2. Insert a match into the lighting rod (A) as shown in fig. 21. Ignite the match and insert through the cooking grids (B) to the burner.
3. Press the control knob and rotate to the “HI” setting, continue to press the knob until the burner ignites. The burner should light immediately.
4. If the burner does not light within seconds turn the knob to the “OFF” position, wait 5 minutes and try again.

Fig. 21

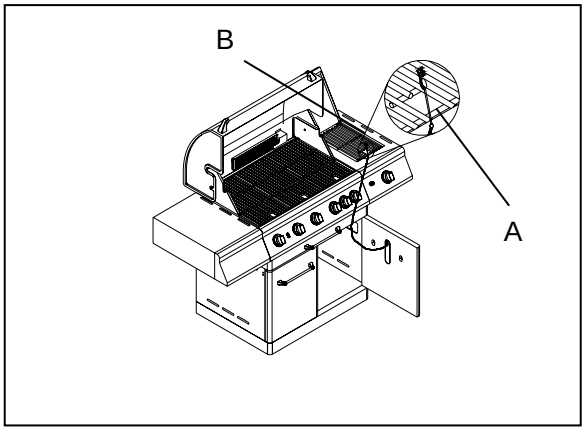

Rotisserie Burner

Note: Remove the warming rack when using a match to light the rotisserie burner.

1. If you have already attempted to light the rear rotisserie burner with the igniter, allow 5 minutes for any accumulated gas to dissipate.
2. Insert a match into the lighting rod (A) as shown in fig. 22. Ignite the match and hold next to the burner (B).
3. Press the control knob and rotate to the “HI” setting. Once the burner ignites, continue to press the knob for 15 seconds.
4. If the burner does not light within seconds turn the knob to the “OFF” position, wait 5 minutes and try again.

Fig. 22

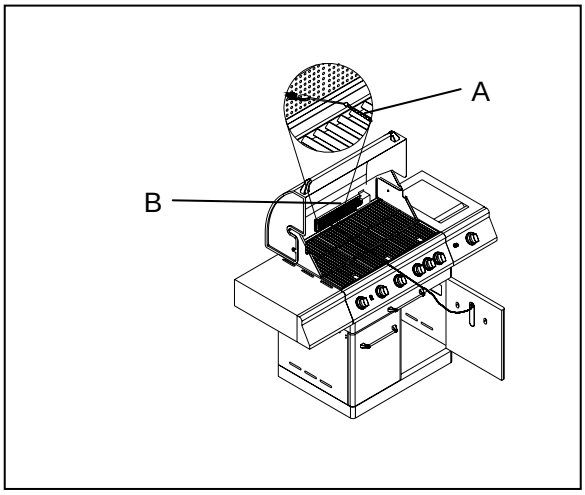

Halogen Lights

Light Operation Instructions

1. Make sure the light's power switch on the control panel is in the "OFF" position

2. Connect power plug to properly grounded outlet.

3. Turn the light's power switch to "ON".

> **WARNING**
> Keep any electrical supply cord away from any heated surface.

Halogen Bulb Replacement

1. Make sure that the grill has cooled before changing the light bulb.
2. Make sure the light's power switch on the control panel is in the "OFF" position and power plug is disconnected from the outlet.
3. Use a Phillips screwdriver to loosen the screw securing the light.

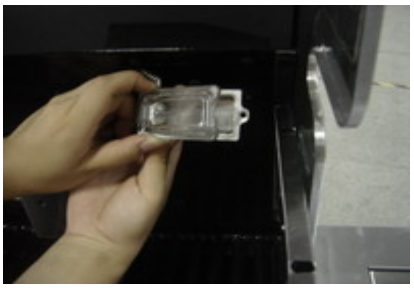

4. Remove the light bulb housing.

5. Remove the glass cover from the light bulb housing.

6. Use a flathead screwdriver to loosen the two screws locking the bulb in place. Pull out the light bulb and replace with a new bulb. Tighten the two screws. **Note:** Do not touch the halogen bulb with bare hands.

7. To re-install the light, replace the glass cover, insert the light bulb housing into the grill and insert and tighten the screw.

Cleaning Method
Follow steps 1 thru 4 above for glass cover removal. Use a damp towel to clean the surface of the glass Cover. Make sure the glass cover is completely dry before re-installing.

> **WARNING**
> Make sure the light switch is in the "OFF" position and the power plug is disconnected from the power outlet prior to cleaning the glass cover.

> **WARNING**
> The light glass cover should not be in contact with water or any other liquid when it's warm. Sudden change of temperature may cause cracks on the glass cover.

> **WARNING**
> To ensure continued protection against electric shock:
> 1. Connect to properly grounded outlets only.
> 2. Do not expose to rain.
> 3. Keep extension cord connections dry and off the ground.

Bulb Specification
Bulb Type: Halogen
Wattage: 10 watts per bulb
Voltage: 12 volts
Please contact customer service at 1-877-323-5263 for assistance on bulb replacement information.

CARE AND MAINTENANCE

Stainless Steel
There are many stainless steel cleaners available. Always use the mildest cleaning procedure first, scrubbing in the direction of the grain. Do not use steel wool as it will scratch the surface. To touch up noticeable scratches in the stainless steel, sand very lightly with dry 100 grit sand paper in the direction of the grain.

Grease specks can gather and bake onto the surfaces of the stainless steel, giving the appearance of rust. For removal, use an abrasive pad with a stainless steel cleaner.

Cooking Grates
The easiest way to clean the grill is immediately after cooking is completed, and the flames have been turned off.

Wear a barbeque mitt to protect your hand from heat and steam.

Scrub the hot cooking grates by dipping a bristle barbecue brush in tap water. Cleaning will be more difficult if the grill is allowed to cool.

Grease Pan
The grease pan should be emptied, wiped down and washed after each use with a mild detergent and warm water solution. Check the grease pan frequently and do not allow excess grease to accumulate and flow out of the grease pan.

Searing Side Burner
Clean the exterior of the burner with a wire brush. Clear any clogged burner ports with a straightened paper clip. Never enlarge the burner ports. Never use a wooden toothpick as it may break off and clog the port.

Grill Burners
Extreme care should be taken when moving a burner. It must be correctly centered on the orifice before any attempt is made to relight the grill. Frequency of cleaning will depend on how often you use the grill. Failure to properly place the burner over the orifice could cause a fire to occur behind and beneath the valve panel, thereby damaging the grill and making it unsafe to operate.

Before cleaning, make sure the gas supply and control knobs are in the “OFF” position and the burners have cooled.

To remove the main burners for cleaning:
1. Locate the burner screw at the rear of the firebox.
2. Remove the screw and lift the burner out of the firebox.

To clean the grill burners:
1. Clean the exterior of the burner with a wire brush. Use a metal scraper for stubborn stains or debris.
2. Clear clogged ports with a straightened paper clip. Never use a wooden toothpick. It may break off and clog the port.
3. Check and clean burners / venturi tubes for insects and insect nests. A clogged tube can lead to a fire beneath and the main control panel.

Fig. 23

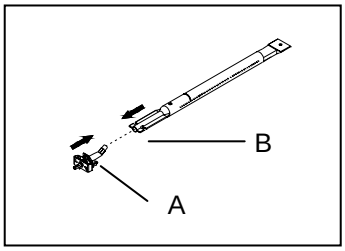

To reinstall the main burners:
1. Insert the burner over the main burner gas valve (Item# 28 on Page 25).
2. Make sure the orifice spud (A) is inside the burner venturi (B) as shown in fig. 23.
3. Align the burner screw hole with the firebox hole, insert screw and tighten.

CAUTION
1. Keep outdoor cooking gas appliance area clear and free from combustible materials, gasoline and other flammable vapors and liquids.
2. Do not obstruct the flow of combustible and ventilation air.
3. Keep the ventilation opening(s) of the enclosure free and clear from debris.

Flame Characteristics
Check for proper burner flame characteristics. Burner flames should be blue and stable with no yellow tips, excessive noise, or lifting as shown in fig. 24. The following steps should be followed for correcting the flame characteristics:

1. Turn the control knobs “OFF”. Close the Natural gas shut-off valve.
2. Allow the grill and burners to cool.
3. If the flame is yellow (not enough air), turn the adjustment screw found at the front of the burner counterclockwise.
4. If the flame is noisy or lifts away from the burner (too much air), turn the adjustment screw clockwise.
5. If these adjustments do not correct the problem, contact customer service at 1-877-323-5263.

Fig. 24

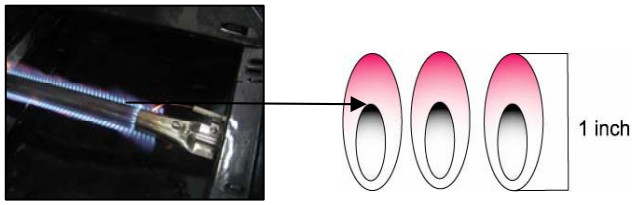

TROUBLESHOOTING

> ⚠ **WARNING**
> Spiders and insects can nest inside the burners of the grill and disrupt gas flow. This very dangerous condition could cause a fire behind the valve panel, thereby damaging the grill and making it unsafe for operation. Inspect the grill at least twice a year.

When to Look for Spiders
You should inspect the burners at least twice a year or immediately after any of the following conditions occur:

1. The smell of gas in conjunction with burner flames appearing yellow.
2. The grill does not reach temperature.
3. The grill heats unevenly.
4. The burners make popping noises.

BEFORE CALLING FOR SERVICE
If the grill does not function properly, use the following checklist before contacting your dealer for service. You may save yourself the cost of a service call.

Problems	What To Do
Grill will not light when the control knob is rotated.	• Clean wire(s) and/or electrode with rubbing alcohol and a clean swab. Wipe with a dry cloth. • Make sure the wire is connected to the electrode assembly. • Check to see if the other burners operate. If so, check the gas orifice on the malfunctioning burner for an obstruction. • Check for spiders and insects.
Burner flame is yellow or orange in conjunction with gas odor.	• Check for spiders and insects • Call customer service at 1-877-323-5263.
Low heat with the control knob on the “HI” setting.	• Check to see if the fuel hose is bent or kinked. • Make sure the grill area is clear of dust. • Make sure the burner and orifice are clean. • Check for spiders and insects.

Nexgrill Industries warrants to the original consumer-purchaser only that this product **(Model #730-0522)** shall be free from defects in workmanship and materials after correct assembly and under normal and reasonable home use for the periods indicated below beginning on the date of purchase. The manufacturer reserves the right to require that defective parts be returned, postage and or freight pre-paid, by the consumer, for review and examination.

- Burners: 10 year *LIMITED* warranty against perforation.
- Stainless Steel Parts: 1 Year *LIMITED* warranty against perforation.
Does not cover cosmetic issues like surface corrosion, scratches and rust.
- All other parts: LIMITED 1 year warranty
Does not cover chipping, scratching, cracking surface corrosion, scratches or rust.

Upon consumer supplying proof of purchase as provided herein, Manufacturer will repair or replace the parts which are proven defective during the applicable warranty period. Parts required to complete such repair or replacement shall be free of charge to you except for shipping costs, as long as the purchaser is within the warranty period from the original date of purchase. **The original consumer-purchaser will be responsible for all shipping charges of parts replaced under the terms of this limited warranty.** This limited warranty is applicable in the United States only, is only available to the original owner of the product and is *not transferable*. Manufacturer requires reasonable proof of your date of purchase. Therefore, you should retain your sales receipt and/or invoice. Defective or missing parts subject to this limited warranty will not be replaced without registration or proof of purchase. This limited warranty applies to the functionality of the product ONLY and does not cover cosmetic issues such as scratches, dents, corrosions or discoloring by heat, abrasive and chemical cleaners or any tools used in the assembly or installation of the appliance, surface rust, or the discoloration of stainless steel surfaces. Surface rust, corrosion, or powder paint chipping on metal parts that does not affect the structural integrity of the product is not considered a defect in workmanship or material and is not covered by this warranty. This limited warranty will not reimburse you for the cost of any inconvenience, food, personal injury or property damage. If an original replacement part is not available, a comparable replacement part will be sent. You will be responsible for all shipping charges of parts replaced under the terms of this limited warranty.

ITEMS MANUFACTURER WILL NOT PAY FOR:
1. Service calls to your home.
2. Repairs when your product is used for other than normal, single-family household or residential use.
3. Damage resulting from accident, alteration, misuse, abuse, fire, flood, acts of God, improper installation, and installation not in accordance with electrical or plumbing codes or use of products not approved by the manufacturer.
4. Any food loss due to product failures.
5. Replacement parts or repair labor costs for units operated outside the United States or Canada.
6. Pickup and delivery of your product.
7. Repairs to parts or systems resulting from unauthorized modifications made to the product.
8. The removal and/or reinstallation of your product.
9. Shipping cost, standard or expedited, for warranty/non warranty and replacement parts.

DISCLAIMER OF IMPLIED WARRANTIES; LIMITATION OF REMEDIES
Repair or replacement of defective parts is your exclusive remedy under the terms of this limited warranty. Manufacturer will not be responsible for any consequential or incidental damages arising from the breach of either this limited warranty or any applicable implied warranty, or for failure or damage resulting from acts of God, improper care and maintenance, grease fire, accident, alteration, replacement of parts by anyone other than Manufacturer, misuse, transportation, commercial use, abuse, hostile environments (inclement weather, acts of nature, animal tampering), improper installation or installation not in accordance with local codes or printed manufacturer instructions.

THIS LIMITED WARRANTY IS THE SOLE EXPRESS WARRANTY GIVEN BY THE MANUFACTURER. NO PRODUCT PERFORMANCE SPECIFICATION OR DESCRIPTION WHEREVER APPEARING IS WARRANTED BY MANUFACTURER EXCEPT TO THE EXTENT SET FORTH IN THIS LIMITED WARRANTY. ANY IMPLIED WARRANTY PROTECTION ARISING UNDER THE LAWS OF ANY STATE, INCLUDING IMPLIED WARRANTY OF MERCHANTABILITY OR FITNESS FOR A PARTICULAR PURPOSE OR USE, IS HEREBY LIMITED IN DURATION TO THE DURATION OF THIS LIMITED WARRANTY.

Neither dealers nor the retail establishment selling this product has any authority to make any additional warranties or to promise remedies in addition to or inconsistent with those stated above.
Manufacturer's maximum liability, in any event, shall not exceed the documented purchase price of the product paid by the original consumer. **This warranty only applies to units purchased from an authorized retailer and or re-seller.**
NOTE: Some states do not allow an exclusion or limitation of incidental or consequential damages, so some of the above limitations or exclusions may not apply to you; this limited warranty gives you specific legal rights as set for herein. You may also have other rights which vary from state to state.

If you wish to obtain performance of any obligation under this limited warranty, you should write to:
Nexgrill Industries Customer Relations
280 Machlin Court
City of Industry, CA 91789

All consumer returns, parts orders, questions and troubleshooting can be acquired by calling 1-877-323-5263; Monday – Friday, 7 a.m. – 6 p.m. PST. During the months between May – August, we offer additional assistance on Saturday from 8 a.m. – 12 p.m. PST.

REPLACEMENT PARTS LIST

For replacement parts, call our customer service department at 1-877-323-5263, 8 a.m. – 6 p.m., PST, Monday – Friday and 8 a.m. – 12 p.m. PST, Saturday.

REF#	DESCRIPTION	QTY	REF#	DESCRIPTION	QTY
01	Main lid screw cover	2	38	Swivel caster	1
02	Main lid screw	2	39	Swivel caster with brake	1
03	Temperature gauge	1	40	Door hinge bracket, left	1
04	Temperature gauge heat insulating spacer	1	41	Door hinge bracket, right	1
05	Main lid	1	42	Door magnet	2
06	Logo	1	43	Door handle plastic insert	4
07	Main lid handle heat insulating spacer	2	44	Front door, left	1
08	Hood buffer	2	45	Front door, right	1
09	Main lid handle seat, (left)	1	46	Wire cover	1
10	Main lid handle seat, (right)	1	47	Lighting rod	1
11	Rear baffle	1	48	Cart frame, front	1
12	Rotisserie burner pilot	1	49	Caster	2
13	Rotisserie burner pilot bracket	1	50	Bottom panel, NG	1
14	Rotisserie burner	1	51	Cable strainer	1
15	Rotisserie burner pilot cover	1	52	Transformer supporting box	1
16	Rotisserie orifice w/brass elbow	1	53	Transformer box waterproof spacer	1
17	Rotisserie burner flex gas line	1	54	Transformer supporting box cover	1
18	Rotisserie motor bracket	1	55	Transformer	1
19	Side shelf, left	1	56	Side panel, right	1
20	Side shelf front panel, left	1	57	NG Regulator hose (6’’)	1
21	Top side panel w/bracket, left	1	58	NG Regulator clamp	1
22	Main Control panel	1	59	Regulator, NG	1
23	Control knob	7	60	NG Brass connector	1
24	Light switch	1	61	NG Hose w/quick connector 12’	1
25	Front baffle	1	62	Rubber grommet	2
26	Main manifold	1	63	Back panel, top	1
27	Thermocouple gas valve	1	64	Back panel	1
28	Main gas valve	5	65	Lamps fix bracket	1
29	Side burner hose	1	66	Junction box cover	1
30	Grease tray	1	67	Junction box waterproof spacer	1
31	Grease slide panel, bottom	1	68	Junction box	1
32	Drawer slide bracket	2	69	Grease slide panel, top	1
33	Drawer slide	2	70	Side burner control panel	1
34	Utility drawer	1	71	Side manifold	1
35	Drawer/Door handle tube	3	72	Sear gas valve	1
36	Drawer/Door handle seat	6	73	Pulse igniter module	1

37	Side panel, left	1	74	Sear burner flex gas line	1

REF#	DESCRIPTION	QTY	REF#	DESCRIPTION	QTY
75	Sear burner Igniter wire	1	84	Lamp	2
76	Sear burner	1	85	Igniter wire cover	1
77	Side burner bowl assembly frame	1	86	Main burner	5
78	Grease tray	1	87	Flame tamer	5
79	Side burner cooking grid	1	88	Cooking grid with hole	3
80	Side burner lid	1	89	Warming rack	1
81	Side burner lid hinge rod	1	90	Side burner orifice brass connector	1
82	Top side panel w/bracket, right	1	91	Main lid handle tube	1
83	Main burner bowl assembly	1			

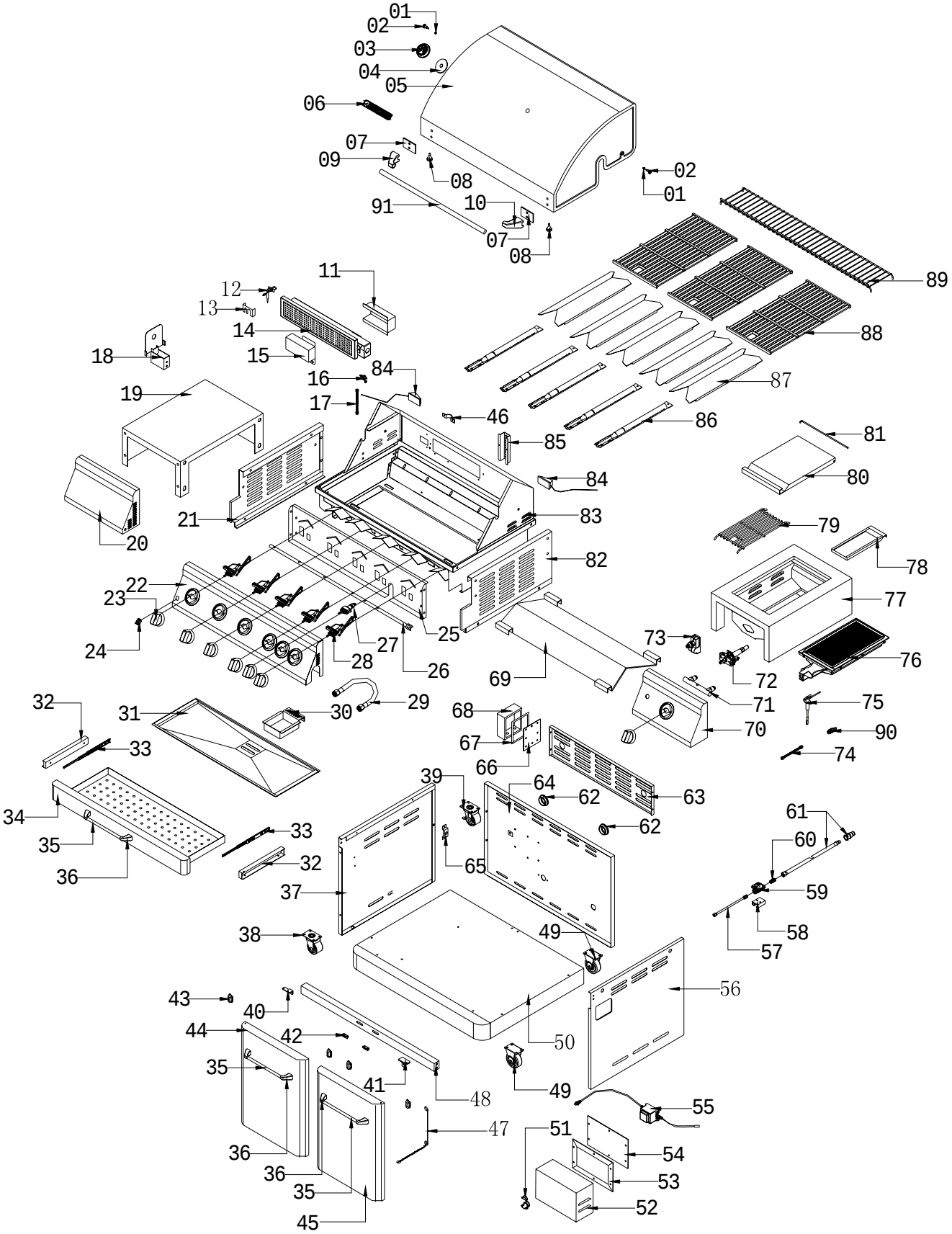

Printed in China